CARFAX Report

US $49.99

2017 Ford Transit 350 XLT

250,758 mi | **VIN:** 1FBZX2ZM9HKA55815

Van | 3.7L V6 F DOHC 24V | Gasoline | Rear wheel drive



ACCIDENT **Minor Damage**

Minor Moderate Severe

11 Service History Records

2 Previous Owners

Types of Owners: Rental, Commercial

Last Owned in Michigan

30 Detailed Records Available

This CARFAX Vehicle History Report is based only on information supplied to CARFAX and available as of 11/17/26 at 8:46:58 AM (CST). Other information about this vehicle, including problems, may not have been reported to CARFAX. Use this report as one important tool, along with a vehicle inspection and test drive, to make a better decision about your next used car.

CARFAX Accident / Damage History

Not all accidents / issues are reported to CARFAX

Event 1

10/14/2017

Accident reported: minor damage with another motor vehicle

- Functional damage reported

Damage Severity Scale

Minor Moderate Severe

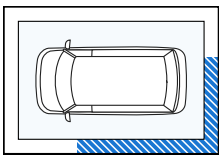

Event 2

06/04/2018

Damage reported: minor damage

Damage Severity Scale

Minor Moderate Severe

Event 3

10/25/2019

Accident reported: minor damage with another motor vehicle

Damage Severity Scale

Minor Moderate Severe

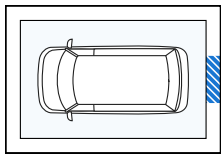

CARFAX Recent Service Highlights

Key services performed in the last 12 months

Service	Comments	Date
Oil	✓ Oil and filter changed	10/06/2026



This car has been recently serviced. That's a good thing!

CARFAX Additional History Not all accidents / issues are reported to CARFAX	Owner 1	Owner 2
Total Loss No total loss reported to CARFAX.	☑ No Issues Reported	☑ No Issues Reported
Structural Damage CARFAX recommends that you have this vehicle inspected by a collision repair specialist.	☑ No Issues Reported	☑ No Issues Reported
Airbag Deployment No airbag deployment reported to CARFAX.	☑ No Issues Reported	☑ No Issues Reported
Odometer Check No indication of an odometer rollback.	☑ No Issues Indicated	☑ No Issues Indicated
Accident / Damage Accidents reported: 10/14/2017 and 10/25/2019. Damage reported: 06/04/2018.	Minor Damage	Minor Damage
Manufacturer Recall No open recalls reported to CARFAX. A current list of recalls is available at Ford Motor Company.	☑ No Recalls Reported	☑ No Recalls Reported
Basic Warranty Original warranty estimated to have expired.	**Warranty Expired**	**Warranty Expired**

CARFAX Title History CARFAX guarantees the information in this section	Owner 1	Owner 2
Damage Brands Salvage | Junk | Rebuilt | Fire | Flood | Hail | Lemon	☑ Guaranteed No Problem	☑ Guaranteed No Problem
Odometer Brands Not Actual Mileage | Exceeds Mechanical Limits	☑ Guaranteed No Problem	☑ Guaranteed No Problem

GUARANTEED - None of these title problems were reported by a U.S. state Department of Motor Vehicles (DMV). If you find that any of these title problems were reported by a DMV and not included in this report, you may qualify.
View Terms | View Certificate

CARFAX Ownership History The number of owners is estimated	Owner 1	Owner 2
Year purchased	2017	2019

Type of owner	Rental	Commercial
Estimated length of ownership	1 yr. 7 mo.	7 yrs. 10 mo.
Owned in the following states/provinces	Michigan	Michigan
Estimated miles driven per year	26,726/yr	26,881/yr
Last reported odometer reading	42,553	250,758

CARFAX Detailed History

Owner 1
Purchased: 2017

Rental Vehicle
26,726 mi/yr

Date	Mileage	Source	Comments
01/16/2017		Ford Motor Company	**Vehicle manufactured and shipped to original dealer** Original Window Sticker
01/19/2017	10	Michigan Motor Vehicle Dept. Tulsa, OK Title #605F0190356	**Title issued or updated** - Registration issued or renewed - First owner reported - Titled or registered as rental vehicle
10/14/2017		Damage Report	**Accident reported: minor damage with another motor vehicle** - Damage to left rear - Damage to rear - Damage to left side - Functional damage reported



CARFAX HAS THE MOST ACCIDENT & DAMAGE INFORMATION



Damage Severity Scale

Minor Moderate Severe

Damage Location

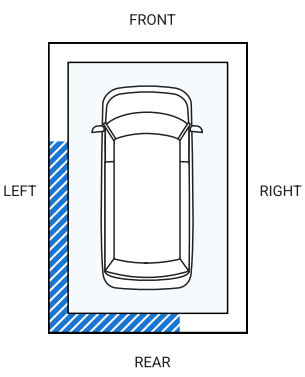



Minor damage is usually cosmetic, including dents or scratches to the vehicle body.

01/24/2018		Michigan Motor Vehicle Dept.	**Registration issued or renewed**

		Tulsa, OK	
03/08/2018	23,986	Lasco Ford Fenton, MI 810-629-2255 lascoford.com **4.2 / 5.0** 58 Verified Reviews **13** Customer Favorites	**Vehicle serviced** - Maintenance inspection completed
06/04/2018		Damage Report	**Damage reported: minor damage** 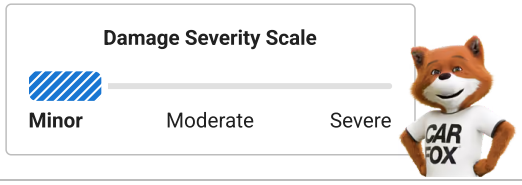
08/23/2018	42,553	Fleet/Lease Company	**Vehicle sold**
08/30/2018		Dealer Inventory	**Vehicle offered for sale**
01/08/2019		Michigan Motor Vehicle Dept. Milan, MI	**Registration issued or renewed**
01/09/2019		Michigan Motor Vehicle Dept. Milan, MI	**Loan or lien reported**

Owner 2
Purchased: 2019

Commercial Vehicle
26,881 mi/yr

Date	Mileage	Source	Comments
01/09/2019	42,554	Michigan Motor Vehicle Dept. Milan, MI Title #603H0080614	**Title issued or updated** - New owner reported
10/25/2019		Damage Report	**Accident reported: minor damage with another motor vehicle** - Damage to rear 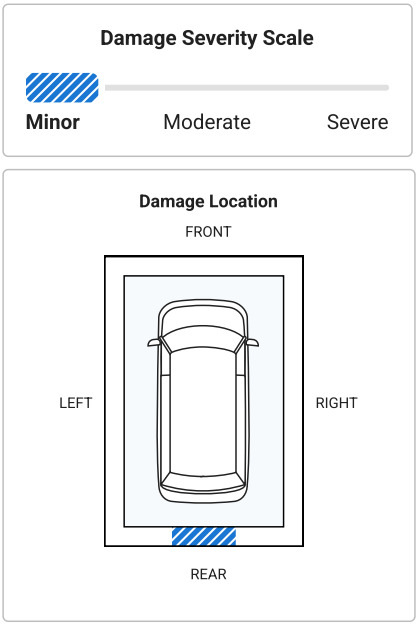
01/08/2020		Michigan Motor Vehicle Dept.	**Registration issued or renewed** - Titled or registered as commercial vehicle

CARFAX HAS THE MOST ACCIDENT & DAMAGE INFORMATION



		Milan, MI		
01/12/2021		Michigan Motor Vehicle Dept. Milan, MI		**Registration issued or renewed** - Titled or registered as commercial vehicle
01/17/2022		Michigan Motor Vehicle Dept. Milan, MI		**Registration issued or renewed** - Titled or registered as commercial vehicle
02/01/2023		Michigan Motor Vehicle Dept. Milan, MI		**Registration issued or renewed** - Titled or registered as commercial vehicle
03/09/2023		Michigan Motor Vehicle Dept. Warren, MI		**Registration issued or renewed** - Titled or registered as commercial vehicle
01/08/2024	221,000	Victory Lane Quick Oil Change Canton, MI 734-397-0711 victorylane.net **4.8 / 5.0** 146 Verified Reviews **1,091** Customer Favorites		**Vehicle serviced** - Maintenance inspection completed - Fluids checked - Oil and filter changed
01/26/2024		Michigan Motor Vehicle Dept. Warren, MI		**Registration issued or renewed** - Titled or registered as commercial vehicle
01/30/2025		Michigan Motor Vehicle Dept. Warren, MI		**Registration issued or renewed** - Titled or registered as commercial vehicle
02/20/2025	223,758	Valvoline Instant Oil Change Canton, MI 734-981-4415 vioc.com **4.6 / 5.0** 308 Verified Reviews **186** Customer Favorites		**Vehicle serviced** - Oil and filter changed
10/09/2025		Michigan Motor Vehicle Dept. Warren, MI		**Registration issued or renewed** - Titled or registered as commercial vehicle
10/21/2025	234,770	Village Ford Dearborn, MI 313-565-3900 https://villageford.com/ **4.6 / 5.0** 1,071 Verified Reviews **12,214** Customer Favorites		**Vehicle serviced** - Airbag system checked - Drivability/performance checked
02/07/2026	237,931	Valvoline Instant Oil Change Garden City, MI 734-422-0662 vioc.com **4.6 / 5.0** 175 Verified Reviews **154** Customer Favorites		**Vehicle serviced** - Headlight bulb(s) replaced - Oil and filter changed
02/18/2026	239,460	Valvoline Instant Oil Change Garden City, MI 734-422-0662 vioc.com **4.6 / 5.0** 175 Verified Reviews **154** Customer Favorites		**Vehicle serviced** - Oil and filter changed
03/31/2026	241,712	Valvoline Instant Oil Change Canton, MI 734-981-4415 vioc.com **4.6 / 5.0** 308 Verified Reviews		**Vehicle serviced** - Oil and filter changed

		186 Customer Favorites		
05/26/2026	245,847	Valvoline Instant Oil Change Garden City, MI 734-422-0662 vioc.com **4.6 / 5.0** 175 Verified Reviews **154** Customer Favorites		**Vehicle serviced** - Oil and filter changed
07/07/2026	246,558	Jack Demmer Ford Wayne, MI 734-721-2600 jdemmerford.com **4.7 / 5.0** 555 Verified Reviews **7,329** Customer Favorites		**Vehicle serviced**
09/08/2026	248,924	Valvoline Instant Oil Change Garden City, MI 734-422-0662 vioc.com **4.6 / 5.0** 175 Verified Reviews **154** Customer Favorites		**Vehicle serviced** - Oil and filter changed
10/06/2026	250,758	Valvoline Instant Oil Change Canton, MI 734-981-4415 vioc.com **4.6 / 5.0** 308 Verified Reviews **186** Customer Favorites		**Vehicle serviced** - Air filter replaced - Cabin air filter replaced/cleaned - Oil and filter changed

Have Questions? Consumers, please visit our Help Center at www.carfax.com. Dealers or Subscribers, please visit our Help Center at www.carfaxonline.com.

CARFAX Glossary

Accident Indicator
CARFAX receives information about accidents in all 50 states, the District of Columbia and Canada.

Not every accident is reported to CARFAX. As details about the accident become available, those additional details are added to the CARFAX Vehicle History Report. CARFAX recommends that you have this vehicle inspected by a qualified mechanic.

- According to the National Safety Council, Injury Facts, 2021 edition, 5% of the 276 million registered vehicles in the U.S. were involved in an accident in 2019. Over 77% of these were considered minor or moderate.
- This CARFAX Vehicle History Report is based only on information supplied to CARFAX and available as of 11/17/26 at 8:46:58 AM (CST). Other information about this vehicle, including problems, may not have been reported to CARFAX. Use this report as one important tool, along with a vehicle inspection and test drive, to make a better decision about your next used car.

Commercial
Vehicle was registered for business purposes.

Damage Indicator
Damage can be a result of many different types of events. Examples include contact with objects (other cars, trees, traffic signs, road debris, etc), vandalism, or weather-related events. Not every damage event is reported to CARFAX. As details about the damage event become available, those additional details are added to the CARFAX Vehicle History Report. CARFAX recommends that you have this vehicle inspected by a qualified mechanic.

- This CARFAX Vehicle History Report is based only on information supplied to CARFAX and available as of 11/17/26 at 8:46:58 AM (CST). Other information about this vehicle, including problems, may not have been reported to CARFAX. Use this report as one important tool, along with a vehicle inspection and test drive, to make a better decision about your next used car.

Damage Severity
Damage events result in one of the following severity levels:

- Minor: Generally, minor damage is cosmetic (including dents or scratches), may only require reconditioning, and typically does not compromise a vehicle's operation and/or safety.
- Moderate: Moderate damage may affect multiple components of the vehicle and may impair the vehicle's operation and/or safety.
- Severe: Severe damage usually affects multiple components of the vehicle and is likely to compromise the vehicle's operation and/or safety.

CARFAX recommends getting a pre-purchase inspection at a certified collision repair facility.

First Owner
When the first owner(s) obtains a title from a Department of Motor Vehicles as proof of ownership.

Ford or Lincoln Mercury Recall
The Ford Motor Company provides CARFAX with Field Service Action and recall information regarding safety, compliance and emissions programs announced since 2000 for a specific vehicle. For complete information regarding programs or concerns about this vehicle, please contact a local Ford or Lincoln Mercury

Dealer.

New Owner Reported
When a vehicle is sold to a new owner, the Title must be transferred to the new owner(s) at a Department of Motor Vehicles.

Ownership History
CARFAX defines an owner as an individual or business that possesses and uses a vehicle. Not all title transactions represent changes in ownership. To provide estimated number of owners, CARFAX proprietary technology analyzes all the events in a vehicle history. Estimated ownership is available for vehicles manufactured after 1991 and titled solely in the US including Puerto Rico. Dealers sometimes opt to take ownership of a vehicle and are required to in the following states: Maine, Massachusetts, New Jersey, Ohio, Oklahoma, Pennsylvania and South Dakota. Please consider this as you review a vehicle's estimated ownership history.

Rental
Vehicle was registered by a rental agency.

Title Issued
A state issues a title to provide a vehicle owner with proof of ownership. Each title has a unique number. Each title or registration record on a CARFAX report does not necessarily indicate a change in ownership. In Canada, a registration and bill of sale are used as proof of ownership.

Follow Us: facebook.com/CARFAX @CARFAXinc About CARFAX

CARFAX DEPENDS ON ITS SOURCES FOR THE ACCURACY AND RELIABILITY OF ITS INFORMATION. THEREFORE, NO RESPONSIBILITY IS ASSUMED BY CARFAX OR ITS AGENTS FOR ERRORS OR OMISSIONS IN THIS REPORT. CARFAX FURTHER EXPRESSLY DISCLAIMS ALL WARRANTIES, EXPRESS OR IMPLIED, INCLUDING ANY IMPLIED WARRANTIES OF MERCHANTABILITY OR FITNESS FOR A PARTICULAR PURPOSE.

© 2026 CARFAX, Inc., part of Mobility Global. All rights reserved.
11/17/26 8:46:58 AM (CST)

SHOW ME THE CARFAX

I have reviewed and received a copy of the CARFAX Vehicle History Report for this 2017 FORD TRANSIT vehicle (VIN: 1FBZX2ZM9HKA55815), which is based on information supplied to CARFAX and available as of 11/17/26 at 9:46 AM (EST).

Customer Signature **Date**

Dealer Signature **Date**