CARFAX Report

US $49.99

2004 Chrysler PT Cruiser Limited Edition

164,712 mi | **VIN:** 3C8FY68B64T262446

Van | 2.4L I4 F DOHC 16V | Gasoline | Front wheel drive



ACCIDENT **Minor Damage**

Minor Moderate Severe

- Damage Repairs Reported
- **23** Service History Records
- **4** Previous Owners
- Personal Vehicle
- Last Owned in Michigan

This CARFAX Vehicle History Report is based only on information supplied to CARFAX and available as of 9/21/26 at 12:17:48 PM (CDT). Other information about this vehicle, including problems, may not have been reported to CARFAX. Use this report as one important tool, along with a vehicle inspection and test drive, to make a better decision about your next used car.

CARFAX Accident / Damage History

Not all accidents / issues are reported to CARFAX

Event 1

02/16/2012

Accident reported: very minor damage with another motor vehicle

Damage Severity Scale

Minor Moderate Severe

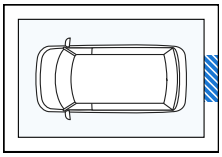

Event 2

12/09/2012

Accident reported: minor damage

- It hit an animal

Damage Severity Scale

Minor Moderate Severe

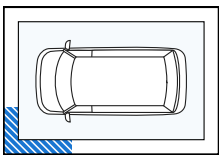

Event 3

12/20/2012
Damage repairs performed
- Repairs to front

CARFAX Additional History Not all accidents / issues are reported to CARFAX	Owners 1-2	Owner 3	Owner 4
Total Loss No total loss reported to CARFAX.	No Issues Reported	No Issues Reported	No Issues Reported
Structural Damage CARFAX recommends that you have this vehicle inspected by a collision repair specialist.	No Issues Reported	No Issues Reported	No Issues Reported
Airbag Deployment No airbag deployment reported to CARFAX.	No Issues Reported	No Issues Reported	No Issues Reported
Odometer Check No indication of an odometer rollback.	No Issues Indicated	No Issues Indicated	No Issues Indicated
Accident / Damage Accidents reported: 02/16/2012 and 12/09/2012. Damage repairs reported: 12/20/2012.	No Issues Reported	Minor Damage	No New Issues Reported
Manufacturer Recall No open recalls reported to CARFAX.	No Recalls Reported	No Recalls Reported	No Recalls Reported
Basic Warranty Original warranty estimated to have expired.	**Warranty Expired**	**Warranty Expired**	**Warranty Expired**

CARFAX Title History	Owners 1-2	Owner 3	Owner 4
Damage Brands Salvage | Junk | Rebuilt | Fire | Flood | Hail | Lemon	No Problem	No Problem	No Problem
Odometer Brands Not Actual Mileage | Exceeds Mechanical Limits	No Problem	No Problem	No Problem

CARFAX Ownership History The number of owners is estimated	Owners 1-2	Owner 3	Owner 4
Year purchased	2004	2009	2014
Type of owner	Personal	Personal	Personal
Estimated length of ownership	5 yrs. 9 mo.	4 yrs. 5 mo.	12 years
Owned in the following states/provinces	Michigan, Michigan	Michigan	Michigan
Estimated miles driven per year	See Details	16,217/yr	12,179/yr
Last reported odometer reading	56,802	131,024	164,712

CARFAX Detailed History

Owner 1
Purchased: 2004



Low mileage! This owner drove less than the industry average of 15,000 miles per year.

Personal Vehicle
10,423 mi/yr

Date	Mileage	Source	Comments
02/18/2004	49	Michigan	**Title or registration issued**

		Motor Vehicle Dept. Clio, MI Title #194R0490389	- First owner reported - Titled or registered as personal vehicle
07/02/2004		Lakeshore Chrysler Dodge Jeep Inc. Slidell, LA 985-641-9595 lakeshorechryslerdodgejeep.com/index.htm **4.5 / 5.0** 294 Verified Reviews **108** Customer Favorites	**Vehicle serviced** - Oil and filter changed
07/20/2005		Dub Herring Chrysler Picayune, MS 601-799-3110 cars.com/gooddealpawpaw/chrysler	**Vehicle serviced** - Oil and filter changed
08/16/2005		Randy Wise Chrysler Dodge Jeep Ram Clio, MI 810-687-6880 randywisechryslerdodgejeepram.com/ **4.6 / 5.0** 395 Verified Reviews **2,552** Customer Favorites	**Vehicle serviced** - Maintenance inspection completed - Tire(s) balanced - Tire(s) mounted
11/02/2005		Schaefer & Bierlein Chrysler Frankenmuth, MI 989-652-9965 sbchrysler.com **4.9 / 5.0** 611 Verified Reviews **464** Customer Favorites	**Vehicle serviced** - Maintenance inspection completed - Oil and filter changed
05/02/2007		Michigan Motor Vehicle Dept. Clio, MI	**Registration issued or renewed**
05/12/2008		Michigan Motor Vehicle Dept. Clio, MI	**Registration issued or renewed**
12/17/2008		Hoover Mitsubishi Charleston Charleston, SC 843-763-0040 hoovermitsubishi.com **4.3 / 5.0** 20 Verified Reviews	**Vehicle serviced** - Maintenance inspection completed - Brakes checked - Engine checked - Steering/suspension checked
05/11/2009		Michigan Motor Vehicle Dept. Clio, MI	**Registration issued or renewed**
07/30/2009	56,802	Saturn of Flint Flint, MI 810-600-9108 saturnofflint.com	**Vehicle offered for sale**
08/06/2009		Saturn of Flint Flint, MI 810-600-9108 saturnofflint.com	**Vehicle serviced**
08/20/2009		Saturn of Flint Flint, MI 810-600-9108 saturnofflint.com	**Vehicle sold**

Owner 2
Purchased: 2009

Personal Vehicle

Date	Mileage	Source	Comments
08/20/2009		Michigan Motor Vehicle Dept. Davison, MI Title #603X2321066	**Title or registration issued** - New owner reported
08/24/2009		Saturn of Flint Flint, MI 810-600-9108 saturnofflint.com	**Vehicle serviced**
09/08/2009		Saturn of Flint Flint, MI 810-600-9108 saturnofflint.com	**Vehicle serviced**

Owner 3
Purchased: 2009

Personal Vehicle
16,217 mi/yr

Date	Mileage	Source	Comments
11/18/2009	59,344	Michigan Motor Vehicle Dept. Davison, MI Title #185X3220369	**Title or registration issued** - New owner reported
01/19/2010	61,600	Jim Riehl's Friendly Chrysler Dodge Jeep Lapeer, MI 810-664-2900 jimriehl.com **4.7 / 5.0** 898 Verified Reviews **8,433** Customer Favorites	**Vehicle serviced** - Wiring repaired
10/12/2010		Michigan Motor Vehicle Dept. Davison, MI	**Registration issued or renewed**
10/27/2011		Michigan Motor Vehicle Dept. Davison, MI	**Registration issued or renewed**
02/16/2012		Damage Report	**Accident reported: very minor damage with another motor vehicle** - Damage to rear

CARFAX HAS THE MOST ACCIDENT & DAMAGE INFORMATION



Damage Severity Scale

Minor Moderate Severe

Damage Location

FRONT

LEFT RIGHT

REAR



Minor damage is usually cosmetic, including dents or scratches to the vehicle body.

10/11/2012		Michigan Motor Vehicle Dept. Grand Blanc, MI	**Registration issued or renewed** - Registration updated when owner moved the vehicle to a new location
12/09/2012		Damage Report	**Accident reported: minor damage** - It hit an animal - Damage to left front

CARFAX HAS THE MOST ACCIDENT & DAMAGE INFORMATION



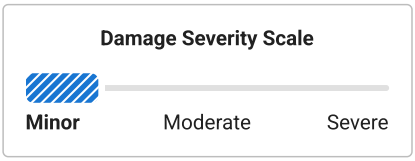

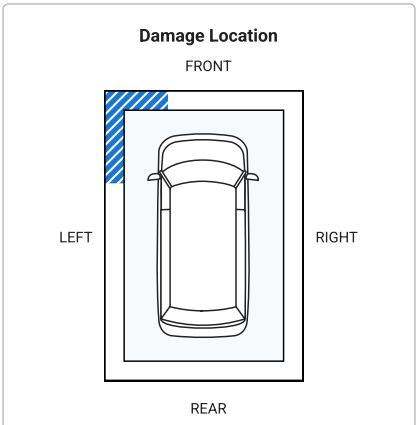



Minor damage is usually cosmetic, including dents or scratches to the vehicle body.

12/20/2012	105,580	Collision Repair Facility	**Damage repairs performed** - Repairs to front
12/21/2012		Service Facility ★ **4.4 / 5.0** 262 Verified Reviews	**Vehicle serviced** - Oil and filter changed
01/22/2013	107,231	Service Facility ★ **4.4 / 5.0** 262 Verified Reviews	**Vehicle serviced**
10/10/2013		Michigan Motor Vehicle Dept. Grand Blanc, MI	**Registration issued or renewed**
10/25/2013	121,863	Al Serra Auto Plaza Grand Blanc, MI 810-694-5600 alserra.com ★ **4.4 / 5.0** 262 Verified Reviews	**Vehicle serviced** - Maintenance inspection completed - Oil and filter changed
04/19/2014	131,010	Al Serra Auto Plaza Grand Blanc, MI 810-694-5600 alserra.com ★ **4.4 / 5.0** 262 Verified Reviews	**Vehicle serviced** - Maintenance inspection completed
04/28/2014		Al Serra Auto Plaza Grand Blanc, MI alserra.com	**Vehicle offered for sale**

		★ **4.4 / 5.0** 262 Verified Reviews	
05/16/2014	131,024	Auto Auction	**Vehicle sold**



Millions of used vehicles are bought and sold at auction every year.

Owner 4
Purchased: 2014

Personal Vehicle
12,179 mi/yr

Date	Mileage	Source	Comments
08/27/2014		Michigan Motor Vehicle Dept. Kent City, MI Title #239C2390230	**Title or registration issued** - New owner reported
01/23/2015	137,049	Performance Plus Quick Oil Change Sparta, MI 616-887-0116 performanceplusoil.com ★ **4.8 / 5.0** 80 Verified Reviews ♥ **46** Customer Favorites	**Vehicle serviced** - Oil and filter changed
02/17/2015		Michigan Motor Vehicle Dept. Kent City, MI	**Registration issued or renewed**
04/21/2015	140,089	Performance Plus Quick Oil Change Sparta, MI 616-887-0116 performanceplusoil.com ★ **4.8 / 5.0** 80 Verified Reviews ♥ **46** Customer Favorites	**Vehicle serviced** - Cabin air filter replaced/cleaned - Oil and filter changed - Wiper(s) replaced
06/26/2015	143,609	Performance Plus Quick Oil Change Sparta, MI 616-887-0116 performanceplusoil.com ★ **4.8 / 5.0** 80 Verified Reviews ♥ **46** Customer Favorites	**Vehicle serviced** - Light bulb(s) replaced - Oil and filter changed
09/09/2015	146,744	Performance Plus Quick Oil Change Sparta, MI 616-887-0116 performanceplusoil.com ★ **4.8 / 5.0** 80 Verified Reviews ♥ **46** Customer Favorites	**Vehicle serviced** - Oil and filter changed
11/19/2015	149,737	Performance Plus Quick Oil Change Sparta, MI 616-887-0116 performanceplusoil.com ★ **4.8 / 5.0** 80 Verified Reviews ♥ **46** Customer Favorites	**Vehicle serviced** - Oil and filter changed
02/01/2016	152,784	Performance Plus Quick Oil Change Sparta, MI 616-887-0116 performanceplusoil.com ★ **4.8 / 5.0** 80 Verified Reviews	**Vehicle serviced** - Air filter replaced - Oil and filter changed

		46 Customer Favorites		
02/09/2016		Michigan Motor Vehicle Dept. Kent City, MI		**Registration issued or renewed**
05/17/2016	155,355	Performance Plus Quick Oil Change Sparta, MI 616-887-0116 performanceplusoil.com **4.8 / 5.0** 80 Verified Reviews **46** Customer Favorites		**Vehicle serviced** - Light bulb(s) replaced - Oil and filter changed
10/19/2016	158,452	Performance Plus Quick Oil Change Sparta, MI 616-887-0116 performanceplusoil.com **4.8 / 5.0** 80 Verified Reviews **46** Customer Favorites		**Vehicle serviced** - Oil and filter changed
01/19/2017	161,562	Performance Plus Quick Oil Change Sparta, MI 616-887-0116 performanceplusoil.com **4.8 / 5.0** 80 Verified Reviews **46** Customer Favorites		**Vehicle serviced** - Oil and filter changed
02/01/2017		Michigan Motor Vehicle Dept. Kent City, MI		**Registration issued or renewed**
05/01/2017	164,712	Performance Plus Quick Oil Change Sparta, MI 616-887-0116 performanceplusoil.com **4.8 / 5.0** 80 Verified Reviews **46** Customer Favorites		**Vehicle serviced** - Oil and filter changed
02/08/2018		Michigan Motor Vehicle Dept. Kent City, MI		**Registration issued or renewed**
02/22/2019		Michigan Motor Vehicle Dept. Kent City, MI		**Registration issued or renewed**
02/19/2020		Michigan Motor Vehicle Dept. Kent City, MI		**Registration issued or renewed**
01/24/2021		Michigan Motor Vehicle Dept. Kent City, MI		**Registration issued or renewed**
01/06/2022		Michigan Motor Vehicle Dept. Kent City, MI		**Registration issued or renewed**



Hmm, we haven't received any information on this car since January 2022. Before you buy, ask the seller for recent service or repair records.

Have Questions? Consumers, please visit our Help Center at www.carfax.com. Dealers or Subscribers, please visit our Help Center at www.carfaxonline.com.

Glossary

Accident Indicator
CARFAX receives information about accidents in all 50 states, the District of Columbia and Canada.

Not every accident is reported to CARFAX. As details about the accident become available, those additional details are added to the CARFAX Vehicle History Report. CARFAX recommends that you have this vehicle inspected by a qualified mechanic.

- According to the National Safety Council, Injury Facts, 2021 edition, 5% of the 276 million registered vehicles in the U.S. were involved in an accident in 2019. Over 77% of these were considered minor or moderate.
- This CARFAX Vehicle History Report is based only on information supplied to CARFAX and available as of 9/21/26 at 12:17:48 PM (CDT). Other information about this vehicle, including problems, may not have been reported to CARFAX. Use this report as one important tool, along with a vehicle inspection and test drive, to make a better decision about your next used car.

Collision Repair Facility
A collision repair facility specializes in repairing vehicle damage caused by accidents and other incidents. A vehicle inspection completed by your dealer or a professional inspector is recommended.

Damage Severity
Damage events result in one of the following severity levels:

- Minor: Generally, minor damage is cosmetic (including dents or scratches), may only require reconditioning, and typically does not compromise a vehicle's operation and/or safety.
- Moderate: Moderate damage may affect multiple components of the vehicle and may impair the vehicle's operation and/or safety.
- Severe: Severe damage usually affects multiple components of the vehicle and is likely to compromise the vehicle's operation and/or safety.

CARFAX recommends getting a pre-purchase inspection at a certified collision repair facility.

First Owner
When the first owner(s) obtains a title from a Department of Motor Vehicles as proof of ownership.

New Owner Reported
When a vehicle is sold to a new owner, the Title must be transferred to the new owner(s) at a Department of Motor Vehicles.

Ownership History
CARFAX defines an owner as an individual or business that possesses and uses a vehicle. Not all title transactions represent changes in ownership. To provide estimated number of owners, CARFAX proprietary technology analyzes all the events in a vehicle history. Estimated ownership is available for vehicles manufactured after 1991 and titled solely in the US including Puerto Rico. Dealers sometimes opt to take ownership of a vehicle and are required to in the following states: Maine, Massachusetts, New Jersey, Ohio, Oklahoma, Pennsylvania and South Dakota. Please consider this as you review a vehicle's estimated ownership history.

Follow Us: facebook.com/CARFAX @CARFAXinc About CARFAX

CARFAX DEPENDS ON ITS SOURCES FOR THE ACCURACY AND RELIABILITY OF ITS INFORMATION. THEREFORE, NO RESPONSIBILITY IS ASSUMED BY CARFAX OR ITS AGENTS FOR ERRORS OR OMISSIONS IN THIS REPORT. CARFAX FURTHER EXPRESSLY DISCLAIMS ALL WARRANTIES, EXPRESS OR IMPLIED, INCLUDING ANY IMPLIED WARRANTIES OF MERCHANTABILITY OR FITNESS FOR A PARTICULAR PURPOSE.

© 2026 CARFAX, Inc., part of S&P Global. All rights reserved.
9/21/26 12:17:48 PM (CDT)

I have reviewed and received a copy of the CARFAX Vehicle History Report for this 2004 CHRYSLER PT CRUISER vehicle (VIN: 3C8FY68B64T262446), which is based on information supplied to CARFAX and available as of 9/21/26 at 1:17 PM (EDT).

Customer Signature	Date	Dealer Signature	Date