CARFAX Report

US $49.99

2012 Chevrolet Traverse LT

VIN: 1GNKVGED9CJ163363

4 Door Wagon/Sport Utility | 3.6L V6 F DOHC 24V | Gasoline | All wheel drive



ACCIDENT **Minor Damage**

Minor Moderate Severe

11 Service History Records

4 Previous Owners

Personal Vehicle

Last Owned in Michigan

38 Detailed Records Available

This CARFAX Vehicle History Report is based only on information supplied to CARFAX and available as of 9/21/26 at 12:30:15 PM (CDT). Other information about this vehicle, including problems, may not have been reported to CARFAX. Use this report as one important tool, along with a vehicle inspection and test drive, to make a better decision about your next used car.

CARFAX Accident / Damage History

Not all accidents / issues are reported to CARFAX

Event 1

05/23/2016

Damage reported: minor damage

Damage Severity Scale

Minor Moderate Severe

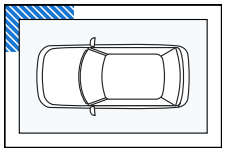

Event 2

10/02/2017

Damage reported: minor damage

Damage Severity Scale

Minor Moderate Severe

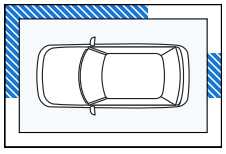

Event 3

06/09/2018
Accident reported: minor damage

Damage Severity Scale
Minor | Moderate | Severe

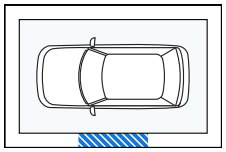

Event 4

03/29/2022
Damage reported: minor damage

Damage Severity Scale
Minor | Moderate | Severe

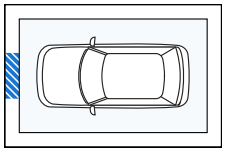

CARFAX Additional History Not all accidents / issues are reported to CARFAX	Owners 1-2	Owner 3	Owner 4
Total Loss No total loss reported to CARFAX.	No Issues Reported	No Issues Reported	No Issues Reported
Structural Damage CARFAX recommends that you have this vehicle inspected by a collision repair specialist.	No Issues Reported	No Issues Reported	No Issues Reported
Airbag Deployment No airbag deployment reported to CARFAX.	No Issues Reported	No Issues Reported	No Issues Reported
Odometer Check Inconsistent mileage indicated.	No Issues Indicated	No Issues Indicated	Mileage Inconsistency
Accident / Damage Damage reported: 05/23/2016, 10/02/2017, and 03/29/2022. Accident reported: 06/09/2018.	Minor Damage	No New Issues Reported	No New Issues Reported
Manufacturer Recall No open recalls reported to CARFAX. Check for open recalls on GM vehicles at recalls.gm.com.	No Recalls Reported	No Recalls Reported	No Recalls Reported
Basic Warranty Original warranty estimated to have expired.	**Warranty Expired**	**Warranty Expired**	**Warranty Expired**

CARFAX Title History CARFAX guarantees the information in this section	Owners 1-2	Owner 3	Owner 4
Damage Brands Salvage | Junk | Rebuilt | Fire | Flood | Hail | Lemon	Guaranteed No Problem	Guaranteed No Problem	Guaranteed No Problem
Odometer Brands Not Actual Mileage | Exceeds Mechanical Limits	Guaranteed No Problem	Guaranteed No Problem	Guaranteed No Problem

GUARANTEED - None of these title problems were reported by a U.S. state Department of Motor Vehicles (DMV). If you find that any of these title problems were reported by a DMV and not included in this report, you may qualify.
View Terms | View Certificate

CARFAX Ownership History The number of owners is estimated	Owners 1-2	Owner 3	Owner 4
Year purchased	2013	2022	2026
Type of owner	Personal	Personal	Personal

Estimated length of ownership	9 yrs. 2 mo.	4 years	1 month
Owned in the following states/provinces	Michigan, Michigan	Michigan	Michigan
Estimated miles driven per year	See Details	16,315/yr	---
Last reported odometer reading	73,935	214,996	---

CARFAX Detailed History

Owner 1
Purchased: 2013

Personal Vehicle
23,819 mi/yr

Date	Mileage	Source	Comments
09/22/2011		Midway Chevrolet Plainwell, MI 269-685-6871 midwayplainwell.com **4.8 / 5.0** 442 Verified Reviews **2,640** Customer Favorites	**Vehicle offered for sale**
09/22/2011	3	Midway Chevrolet Plainwell, MI 269-685-6871 midwayplainwell.com **4.8 / 5.0** 442 Verified Reviews **2,640** Customer Favorites	**Vehicle serviced** - Pre-delivery inspection completed
03/23/2013	198	Midway Chevrolet Plainwell, MI 269-685-6871 midwayplainwell.com **4.8 / 5.0** 442 Verified Reviews **2,640** Customer Favorites	**Vehicle sold**
04/01/2013		Michigan Motor Vehicle Dept. Martin, MI Title #201B0910109	**Title or registration issued** - First owner reported - Titled or registered as personal vehicle
04/22/2013	3,876	Midway Chevrolet Plainwell, MI 269-685-6871 midwayplainwell.com **4.8 / 5.0** 442 Verified Reviews **2,640** Customer Favorites	**Vehicle serviced** - Oil and filter changed
06/27/2013		Midway Chevrolet Plainwell, MI 269-685-6871 midwayplainwell.com **4.8 / 5.0** 442 Verified Reviews **2,640** Customer Favorites	**Vehicle serviced** - Fluids checked - Maintenance reminder reset - Oil and filter changed - Tires rotated
09/03/2013	16,456	Midway Chevrolet Plainwell, MI 269-685-6871 midwayplainwell.com **4.8 / 5.0** 442 Verified Reviews **2,640** Customer Favorites	**Vehicle serviced** - Fluids checked - Maintenance reminder reset - Oil and filter changed - Tires rotated
03/14/2014		Michigan Motor Vehicle Dept. Martin, MI	**Registration issued or renewed**

05/20/2014	29,994	Midway Chevrolet Plainwell, MI 269-685-6871 midwayplainwell.com **4.8 / 5.0** 442 Verified Reviews **2,640** Customer Favorites	**Vehicle serviced** - Airbag system checked - Body electrical wiring repaired - Wiring repaired
08/01/2014	31,781	Midway Chevrolet Plainwell, MI 269-685-6871 midwayplainwell.com **4.8 / 5.0** 442 Verified Reviews **2,640** Customer Favorites	**Vehicle serviced** - Airbag system checked - Seatbelts checked
03/23/2015		Michigan Motor Vehicle Dept. Martin, MI	**Registration issued or renewed**
04/08/2016		Michigan Motor Vehicle Dept. Martin, MI	**Registration issued or renewed**
04/11/2016		Michigan Motor Vehicle Dept. Martin, MI	**Loan or lien reported**

Owner 2
Purchased: 2016

Personal Vehicle
17,373 mi/yr

Date	Mileage	Source	Comments
04/11/2016	40,521	Michigan Motor Vehicle Dept. Martin, MI Title #258E0990412	**Title issued or updated** - New owner reported
05/23/2016		Damage Report	**Damage reported: minor damage** - Damage to right front

CARFAX HAS THE MOST ACCIDENT & DAMAGE INFORMATION



Damage Severity Scale

Minor Moderate Severe

Damage Location

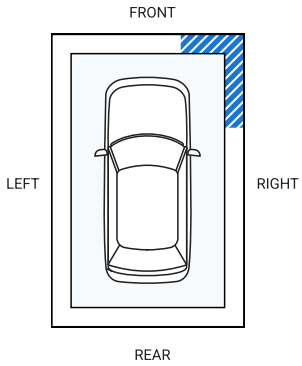



Minor damage is usually cosmetic, including dents or scratches to the vehicle body.

08/30/2016		Michigan Motor Vehicle Dept.	**Registration issued or renewed**

		Martin, MI	
09/05/2017		Michigan Motor Vehicle Dept. Martin, MI	**Registration issued or renewed**
10/02/2017		Damage Report	**Damage reported: minor damage** - Damage to right front - Damage to front - Damage to right side - Damage to rear

CARFAX HAS THE MOST ACCIDENT & DAMAGE INFORMATION



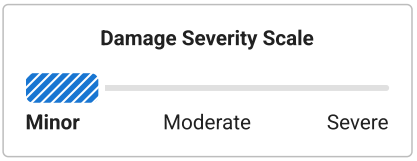

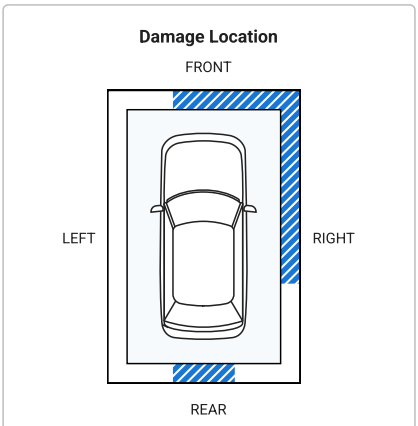

03/14/2018	73,935	Elite Auto Clinic Wayland, MI 269-795-9277 https://facebook.com/elite-auto-clinic-of-gun-lake-llc-1637418679858851/ **4.9 / 5.0** 7 Verified Reviews	**Vehicle serviced**
06/09/2018		Damage Report	**Accident reported: minor damage** - Damage to left side

CARFAX HAS THE MOST ACCIDENT & DAMAGE INFORMATION



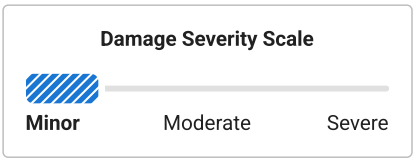

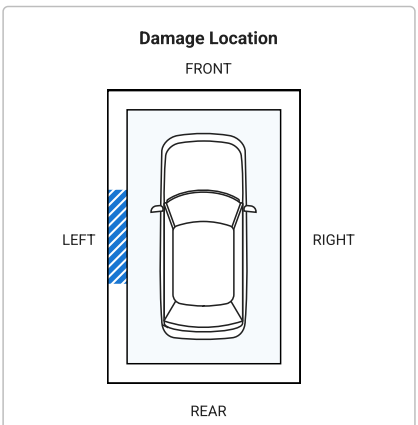

09/05/2018		Michigan	**Registration issued or renewed**

	Motor Vehicle Dept. Martin, MI		
09/06/2019	Michigan Motor Vehicle Dept. Martin, MI		**Registration issued or renewed**
08/17/2020	Michigan Motor Vehicle Dept. Martin, MI		**Registration issued or renewed**
09/01/2021	Michigan Motor Vehicle Dept. Martin, MI		**Registration issued or renewed**
03/29/2022	Damage Report		**Damage reported: minor damage** - Damage to front

CARFAX HAS THE MOST ACCIDENT & DAMAGE INFORMATION



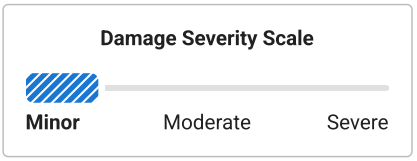

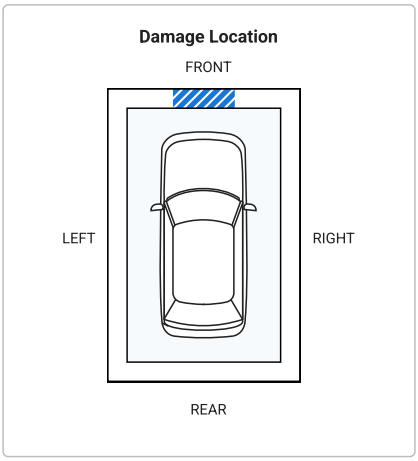

06/01/2022	Michigan Motor Vehicle Dept.		**Vehicle purchase reported**
07/25/2022	Michigan Motor Vehicle Dept. Plainwell, MI		**Registration issued or renewed**

Owner 3
Purchased: 2022

Personal Vehicle
16,315 mi/yr

Date	Mileage	Source		Comments
07/25/2022	149,512	Michigan Motor Vehicle Dept. Plainwell, MI Title #MI0014176870		**Title issued or updated** - New owner reported
08/31/2022	150,937	Harrington's Auto Service Otsego, MI 269-694-9879 harringtonsauto.com/ **5.0 / 5.0** 104 Verified Reviews **7** Customer Favorites		**Vehicle serviced** - Four wheel alignment performed
09/16/2022	151,497	Harrington's Auto Service Otsego, MI 269-694-9879 harringtonsauto.com/ **5.0 / 5.0** 104 Verified Reviews		**Vehicle serviced**

		7 Customer Favorites		
08/24/2023	163,889	Harrington's Auto Service Otsego, MI 269-694-9879 harringtonsauto.com/ 5.0 / 5.0 104 Verified Reviews 7 Customer Favorites		**Vehicle serviced** - Four tires balanced - Four tires mounted - Four tires replaced - Tire(s) replaced
09/13/2023		Michigan Motor Vehicle Dept. Plainwell, MI		**Registration issued or renewed**
08/18/2024		Michigan Motor Vehicle Dept. Plainwell, MI		**Registration issued or renewed**
08/11/2025		Michigan Motor Vehicle Dept. Plainwell, MI		**Registration issued or renewed**
07/29/2026	214,996	Harrington's Auto Service Otsego, MI 269-694-9879 harringtonsauto.com/ 5.0 / 5.0 104 Verified Reviews 7 Customer Favorites		**Vehicle serviced** - Brakes checked - Lower ball joint(s) replaced - Outer tie rod(s) replaced - Power steering checked - Rear coil spring(s) replaced - Rear control arm(s) replaced - Tire condition and pressure checked
08/01/2026		Michigan Motor Vehicle Dept. Plainwell, MI		**Registration issued or renewed**

Owner 4
Purchased: 2026

Personal Vehicle

Date	Mileage	Source	Comments
08/17/2026		Michigan Motor Vehicle Dept.	**Vehicle purchase reported**
08/19/2026	168,606	Michigan Motor Vehicle Dept. Gobles, MI Title #MI0031286693	**Title issued or updated** - New owner reported **MILEAGE INCONSISTENCY**



The mileage reported here conflicts with this vehicle's odometer history. Ask a mechanic or the seller to confirm the actual mileage - this entry may just be a clerical error.

Have Questions? Consumers, please visit our Help Center at www.carfax.com. Dealers or Subscribers, please visit our Help Center at www.carfaxonline.com.

CARFAX Glossary

Accident Indicator
CARFAX receives information about accidents in all 50 states, the District of Columbia and Canada.

Not every accident is reported to CARFAX. As details about the accident become available, those additional details are added to the CARFAX Vehicle History Report. CARFAX recommends that you have this vehicle inspected by a qualified mechanic.

- According to the National Safety Council, Injury Facts, 2021 edition, 5% of the 276 million registered vehicles in the U.S. were involved in an accident in 2019. Over 77% of these were considered minor or moderate.
- This CARFAX Vehicle History Report is based only on information supplied to CARFAX and available as of 9/21/26 at 12:30:15 PM (CDT). Other information about this vehicle, including problems, may not have been reported to CARFAX. Use this report as one important tool, along with a vehicle inspection and test drive, to make a better decision about your next used car.

Damage Indicator
Damage can be a result of many different types of events. Examples include contact with objects (other cars, trees, traffic signs, road debris, etc), vandalism, or weather-related events. Not every damage event is reported to CARFAX. As details about the damage event become available, those additional details are added to the CARFAX Vehicle History Report. CARFAX recommends that you have this vehicle inspected by a qualified mechanic.

- This CARFAX Vehicle History Report is based only on information supplied to CARFAX and available as of 9/21/26 at 12:30:15 PM (CDT). Other information about this vehicle, including problems, may not have been reported to CARFAX. Use this report as one important tool, along with a vehicle inspection and test drive, to make a better decision about your next used car.

Damage Severity
Damage events result in one of the following severity levels:

- Minor: Generally, minor damage is cosmetic (including dents or scratches), may only require reconditioning, and typically does not compromise a vehicle's operation and/or safety.
- Moderate: Moderate damage may affect multiple components of the vehicle and may impair the vehicle's operation and/or safety.
- Severe: Severe damage usually affects multiple components of the vehicle and is likely to compromise the vehicle's operation and/or safety.

CARFAX recommends getting a pre-purchase inspection at a certified collision repair facility.

First Owner
When the first owner(s) obtains a title from a Department of Motor Vehicles as proof of ownership.

Mileage Inconsistency
If an odometer reading is less than a previous reading but CARFAX is uncertain whether the discrepancy is a rollback or a clerical error, then CARFAX calls it a "Mileage Inconsistency". In this case, you should verify the mileage with your dealer or a qualified mechanic.

New Owner Reported
When a vehicle is sold to a new owner, the Title must be transferred to the new owner(s) at a Department of Motor Vehicles.

Ownership History
CARFAX defines an owner as an individual or business that possesses and uses a vehicle. Not all title transactions represent changes in ownership. To provide estimated number of owners, CARFAX proprietary technology analyzes all the events in a vehicle history. Estimated ownership is available for vehicles manufactured after 1991 and titled solely in the US including Puerto Rico. Dealers sometimes opt to take ownership of a vehicle and are required to in the following states: Maine, Massachusetts, New Jersey, Ohio, Oklahoma, Pennsylvania and South Dakota. Please consider this as you review a vehicle's estimated ownership history.

Title Issued
A state issues a title to provide a vehicle owner with proof of ownership. Each title has a unique number. Each title or registration record on a CARFAX report does not necessarily indicate a change in ownership. In Canada, a registration and bill of sale are used as proof of ownership.

Follow Us: **facebook.com/CARFAX** **@CARFAXinc** **About CARFAX**

CARFAX DEPENDS ON ITS SOURCES FOR THE ACCURACY AND RELIABILITY OF ITS INFORMATION. THEREFORE, NO RESPONSIBILITY IS ASSUMED BY CARFAX OR ITS AGENTS FOR ERRORS OR OMISSIONS IN THIS REPORT. CARFAX FURTHER EXPRESSLY DISCLAIMS ALL WARRANTIES, EXPRESS OR IMPLIED, INCLUDING ANY IMPLIED WARRANTIES OF MERCHANTABILITY OR FITNESS FOR A PARTICULAR PURPOSE.

© 2026 CARFAX, Inc., part of S&P Global. All rights reserved.
9/21/26 12:30:15 PM (CDT)

I have reviewed and received a copy of the CARFAX Vehicle History Report for this 2012 CHEVROLET TRAVERSE vehicle (VIN: 1GNKVGED9CJ163363), which is based on information supplied to CARFAX and available as of 9/21/26 at 1:30 PM (EDT).

Customer Signature	Date	Dealer Signature	Date