CARFAX Report

US $49.99

2016 Chevrolet Express LT 3500

223,058 mi | **VIN:** 1GAZGPFGXG1193965

Van | 6.0L V8 F OHV 16V | Flex Fuel | Rear wheel drive



ACCIDENT **Minor Damage**

Minor Moderate Severe

20 Service History Records

2 Previous Owners

Types of Owners: Rental, Commercial

Last Owned in Michigan

41 Detailed Records Available

This CARFAX Vehicle History Report is based only on information supplied to CARFAX and available as of 11/17/26 at 8:49:39 AM (CST). Other information about this vehicle, including problems, may not have been reported to CARFAX. Use this report as one important tool, along with a vehicle inspection and test drive, to make a better decision about your next used car.

CARFAX Accident / Damage History

Not all accidents / issues are reported to CARFAX

Event 1

09/18/2017

Damage reported: minor damage

Damage Severity Scale

Minor Moderate Severe

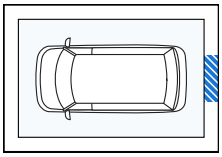

Event 2

08/22/2019

Accident reported: minor damage with another motor vehicle

Damage Severity Scale

Minor Moderate Severe

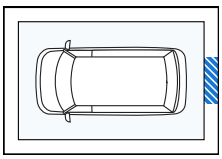

Event 3

09/04/2019

Accident reported: minor damage with another motor vehicle

- Functional damage reported

Damage Severity Scale

Minor Moderate Severe

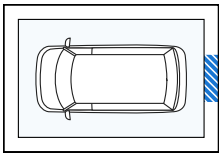

CARFAX Additional History Not all accidents / issues are reported to CARFAX	Owner 1	Owner 2
Total Loss No total loss reported to CARFAX.	No Issues Reported	No Issues Reported
Structural Damage CARFAX recommends that you have this vehicle inspected by a collision repair specialist.	No Issues Reported	No Issues Reported
Airbag Deployment No airbag deployment reported to CARFAX.	No Issues Reported	No Issues Reported
Odometer Check No indication of an odometer rollback.	No Issues Indicated	No Issues Indicated
Accident / Damage Damage reported: 09/18/2017. Accidents reported: 08/22/2019 and 09/04/2019.	Minor Damage	Minor Damage
Manufacturer Recall No open recalls reported to CARFAX. Check for open recalls on GM vehicles at recalls.gm.com.	No Recalls Reported	No Recalls Reported
Basic Warranty Original warranty estimated to have expired.	**Warranty Expired**	**Warranty Expired**

CARFAX Title History CARFAX guarantees the information in this section	Owner 1	Owner 2
Damage Brands Salvage | Junk | Rebuilt | Fire | Flood | Hail | Lemon	Guaranteed No Problem	Guaranteed No Problem
Odometer Brands Not Actual Mileage | Exceeds Mechanical Limits	Guaranteed No Problem	Guaranteed No Problem

GUARANTEED - None of these title problems were reported by a U.S. state Department of Motor Vehicles (DMV). If you find that any of these title problems were reported by a DMV and not included in this report, you may qualify.
View Terms | View Certificate

CARFAX Ownership History The number of owners is estimated	Owner 1	Owner 2
Year purchased	2015	2017
Type of owner	Rental	Commercial
Estimated length of ownership	1 yr. 10 mo.	8 yrs. 10 mo.
Owned in the following states/provinces	Florida, Michigan	Michigan
Estimated miles driven per year	17,339/yr	27,788/yr
Last reported odometer reading	33,206	223,058

CARFAX Detailed History

Owner 1
Purchased: 2015

Rental Vehicle
17,339 mi/yr

Date	Mileage	Source	Comments
12/10/2015		Florida Motor Vehicle Dept. Tulsa, OK	**Vehicle purchase reported** - First owner reported - Titled or registered as rental vehicle
09/26/2016	10	Florida Motor Vehicle Dept. Tulsa, OK Title #0121675709	**Registration issued or renewed** - Vehicle color noted as White
05/31/2017		Florida Motor Vehicle Dept. Tulsa, OK Title #0121675709	**Registration issued or renewed** - Vehicle color noted as White
06/30/2017	27,560	Starling Chevrolet of Orlando Orlando, FL 407-270-7000 starlingchevy.com **4.4 / 5.0** 1,243 Verified Reviews **20,289** Customer Favorites	**Vehicle serviced** - Maintenance inspection completed - Engine/powertrain computer/module checked
09/18/2017		Damage Report	**Damage reported: minor damage** - Damage to rear

CARFAX HAS THE MOST ACCIDENT & DAMAGE INFORMATION



Damage Severity Scale

Minor Moderate Severe

Damage Location

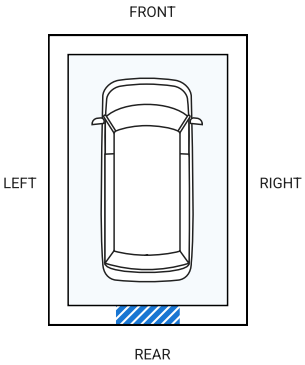



Minor damage is usually cosmetic, including dents or scratches to the vehicle body.

11/06/2017		Florida Motor Vehicle Dept. Tulsa, OK Title #0121675709	**Registration issued or renewed** - Vehicle color noted as White
11/08/2017	33,206	Enterprise Car Sales Toledo, OH enterprisecarsales.com	**Offered for sale as** - an Enterprise Certified Used Car **Certification includes:** - 109 point inspection completed - 12 month / 12,000 mile limited powertrain warranty - 1 year unlimited mileage roadside assistance

11/20/2017		Michigan Motor Vehicle Dept. Cincinnati, OH Title #603F3210111	**Title issued or updated** - Temporary title or registration issued to transport vehicle
12/20/2017		Michigan Motor Vehicle Dept. Milan, MI	**Registration issued or renewed**

Owner 2
Purchased: 2017

Commercial Vehicle
27,788 mi/yr

Date	Mileage	Source	Comments
12/21/2017		Michigan Motor Vehicle Dept. Milan, MI Title #194F3540214	**Title issued or updated** - New owner reported
03/10/2018	38,281	Insta-Lube Burton, MI 810-743-8480 **4.8 / 5.0** 117 Verified Reviews **30** Customer Favorites	**Vehicle serviced** - Maintenance inspection completed - Oil and filter changed
10/08/2018		Applegate Chevrolet Flint, MI 810-471-4736 applegatechev.com **4.5 / 5.0** 486 Verified Reviews **4,443** Customer Favorites	**Vehicle serviced** - A/C system checked - Steering/suspension checked
11/16/2018	58,857	Insta-Lube Burton, MI 810-743-8480 **4.8 / 5.0** 117 Verified Reviews **30** Customer Favorites	**Vehicle serviced** - Maintenance inspection completed - Oil and filter changed
12/25/2018		Applegate Chevrolet Flint, MI 810-471-4736 applegatechev.com **4.5 / 5.0** 486 Verified Reviews **4,443** Customer Favorites	**Vehicle serviced** - Engine/powertrain computer/module checked - Oil and filter changed - Serpentine belt replaced - Throttle body cleaned/serviced
02/14/2019		Applegate Chevrolet Flint, MI 810-471-4736 applegatechev.com **4.5 / 5.0** 486 Verified Reviews **4,443** Customer Favorites	**Vehicle serviced** - Maintenance inspection completed - Brakes checked - Drive belts checked - Electrical system checked - Fluids checked - Glass repaired - Oil and filter changed
02/14/2019		Michigan Motor Vehicle Dept. Milan, MI	**Registration issued or renewed** - Titled or registered as commercial vehicle
03/03/2019		Applegate Chevrolet Flint, MI 810-471-4736 applegatechev.com **4.5 / 5.0** 486 Verified Reviews **4,443** Customer Favorites	**Vehicle serviced** - A/C and heating system checked - Blower motor replaced/repaired - Heater repaired - Rear blower motor replaced - Steering/suspension checked - Transmission fluid changed - Transmission serviced
03/27/2019		Applegate Chevrolet Flint, MI 810-471-4736 applegatechev.com	**Vehicle serviced** - Brakes checked - Brakes replaced - Camshaft position sensor replaced

		★ **4.5 / 5.0** 486 Verified Reviews ♥ **4,443** Customer Favorites	- Drive belts checked - Engine checked - Engine serviced - Engine/powertrain computer/module checked - Fluids checked - Front brake caliper(s) replaced - Front brake pads replaced - Front wheel bearing(s)/hub(s) replaced - Oil and filter changed - Steering/suspension checked
05/24/2019	79,455	Insta-Lube Burton, MI 810-743-8480 ★ **4.8 / 5.0** 117 Verified Reviews ♥ **30** Customer Favorites	**Vehicle serviced** - Maintenance inspection completed - Oil and filter changed
07/10/2019	84,305	Insta-Lube Burton, MI 810-743-8480 ★ **4.8 / 5.0** 117 Verified Reviews ♥ **30** Customer Favorites	**Vehicle serviced** - Maintenance inspection completed - Oil and filter changed
08/06/2019	91,002	Insta-Lube Burton, MI 810-743-8480 ★ **4.8 / 5.0** 117 Verified Reviews ♥ **30** Customer Favorites	**Vehicle serviced** - Maintenance inspection completed - Oil and filter changed
08/22/2019		Damage Report	**Accident reported: minor damage with another motor vehicle** - Damage to rear

CARFAX HAS THE MOST ACCIDENT & DAMAGE INFORMATION



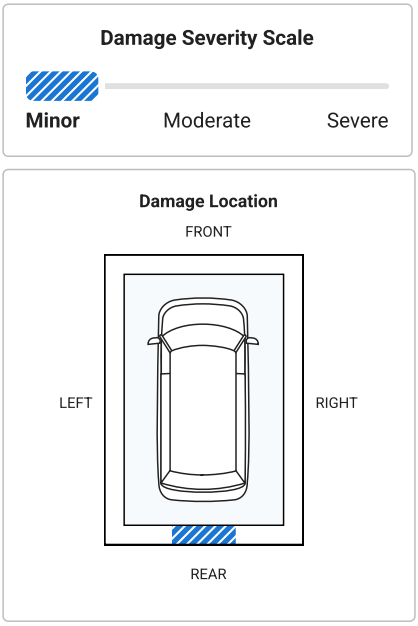

09/04/2019		Damage Report	**Accident reported: minor damage with another motor vehicle** - Damage to rear - Functional damage reported

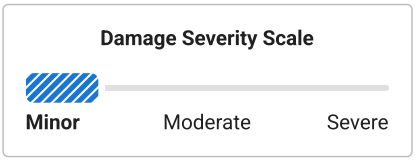

CARFAX HAS THE MOST ACCIDENT & DAMAGE INFORMATION



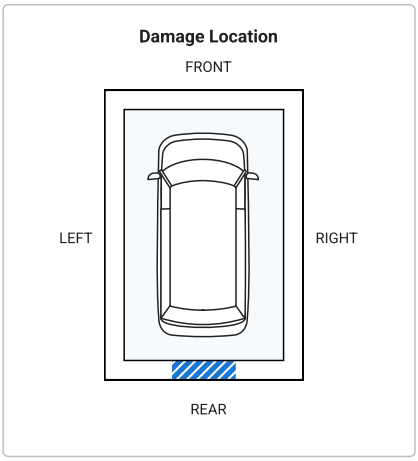

09/05/2019	96,047	Insta-Lube Burton, MI 810-743-8480 **4.8 / 5.0** 117 Verified Reviews **30** Customer Favorites	**Vehicle serviced** - Maintenance inspection completed - Oil and filter changed
09/26/2019		Applegate Chevrolet Flint, MI 810-471-4736 applegatechev.com **4.5 / 5.0** 486 Verified Reviews **4,443** Customer Favorites	**Vehicle serviced** - Maintenance inspection completed - Brakes checked - Control arm(s) replaced - Front suspension serviced - Inner tie rod(s) replaced - Oil and filter changed - Rear brake caliper(s) replaced - Rear brake pads replaced - Rear brake rotor(s) replaced - Steering/suspension checked - Tie rod(s) replaced - Tires rotated - Two wheel alignment performed - Upper control arm(s) replaced
11/20/2019	103,423	Insta-Lube Burton, MI 810-743-8480 **4.8 / 5.0** 117 Verified Reviews **30** Customer Favorites	**Vehicle serviced** - Maintenance inspection completed - Oil and filter changed
12/21/2019	106,418	Insta-Lube Burton, MI 810-743-8480 **4.8 / 5.0** 117 Verified Reviews **30** Customer Favorites	**Vehicle serviced** - Maintenance inspection completed - Oil and filter changed
12/30/2019	106,426	Applegate Chevrolet Flint, MI 810-471-4736 applegatechev.com **4.5 / 5.0** 486 Verified Reviews **4,443** Customer Favorites	**Vehicle serviced**
01/09/2020		Michigan Motor Vehicle Dept. Milan, MI	**Registration issued or renewed** - Titled or registered as commercial vehicle
03/04/2020	109,249	Insta-Lube Burton, MI 810-743-8480 **4.8 / 5.0** 117 Verified Reviews **30** Customer Favorites	**Vehicle serviced** - Maintenance inspection completed - Oil and filter changed
07/01/2020	113,513	Golling Chevrolet Wayne, MI	**Vehicle serviced** - Transmission computer/module reprogrammed

		734-629-4964 gollingchevrolet.com/ ★ **4.5 / 5.0** 123 Verified Reviews ♥ **2,354** Customer Favorites		
01/12/2021		Michigan Motor Vehicle Dept. Milan, MI		**Registration issued or renewed** - Titled or registered as commercial vehicle
01/12/2022		Michigan Motor Vehicle Dept. Milan, MI		**Registration issued or renewed** - Titled or registered as commercial vehicle
04/08/2022	175,830	Insta-Lube Burton, MI 810-743-8480 ★ **4.8 / 5.0** 117 Verified Reviews ♥ **30** Customer Favorites		**Vehicle serviced** - Maintenance inspection completed - Oil and filter changed
02/01/2023		Michigan Motor Vehicle Dept. Milan, MI		**Registration issued or renewed** - Titled or registered as commercial vehicle
02/28/2023		Michigan Motor Vehicle Dept. Warren, MI		**Registration issued or renewed** - Titled or registered as commercial vehicle - Registration updated when owner moved the vehicle to a new location
01/26/2024		Michigan Motor Vehicle Dept. Warren, MI		**Registration issued or renewed** - Titled or registered as commercial vehicle
10/31/2024	223,058	Insta-Lube Burton, MI 810-743-8480 ★ **4.8 / 5.0** 117 Verified Reviews ♥ **30** Customer Favorites		**Vehicle serviced** - Maintenance inspection completed - Oil and filter changed
01/30/2025		Michigan Motor Vehicle Dept. Warren, MI		**Registration issued or renewed** - Titled or registered as commercial vehicle
10/09/2025		Michigan Motor Vehicle Dept. Warren, MI		**Registration issued or renewed** - Titled or registered as commercial vehicle
11/17/2026		OnStar		**Vehicle equipped with OnStar** Get 3 free months of premium OnStar with Automatic Crash Response, Roadside Assistance and Remote Door Unlock by pressing the blue OnStar button Learn more

Have Questions? Consumers, please visit our Help Center at www.carfax.com. Dealers or Subscribers, please visit our Help Center at www.carfaxonline.com.

CARFAX Glossary

Accident Indicator
CARFAX receives information about accidents in all 50 states, the District of Columbia and Canada.

Not every accident is reported to CARFAX. As details about the accident become available, those additional details are added to the CARFAX Vehicle History Report. CARFAX recommends that you have this vehicle inspected by a qualified mechanic.

- According to the National Safety Council, Injury Facts, 2021 edition, 5% of the 276 million registered vehicles in the U.S. were involved in an accident in 2019. Over 77% of these were considered minor or moderate.
- This CARFAX Vehicle History Report is based only on information supplied to CARFAX and available as of 11/17/26 at 8:49:39 AM (CST). Other information about this vehicle, including problems, may not have been reported to CARFAX. Use this report as one important tool, along with a vehicle inspection and test drive, to make a better decision about your next used car.

Commercial
Vehicle was registered for business purposes.

Damage Indicator
Damage can be a result of many different types of events. Examples include contact with objects (other cars, trees, traffic signs, road debris, etc), vandalism, or weather-related events. Not every damage event is reported to CARFAX. As details about the damage event become available, those additional details are added to the CARFAX Vehicle History Report. CARFAX recommends that you have this vehicle inspected by a qualified mechanic.

- This CARFAX Vehicle History Report is based only on information supplied to CARFAX and available as of 11/17/26 at 8:49:39 AM (CST). Other information about this vehicle, including problems, may not have been reported to CARFAX. Use this report as one important tool, along with a vehicle inspection and test drive, to make a better decision about your next used car.

Damage Severity
Damage events result in one of the following severity levels:

- Minor: Generally, minor damage is cosmetic (including dents or scratches), may only require reconditioning, and typically does not compromise a vehicle's operation and/or safety.
- Moderate: Moderate damage may affect multiple components of the vehicle and may impair the vehicle's operation and/or safety.
- Severe: Severe damage usually affects multiple components of the vehicle and is likely to compromise the vehicle's operation and/or safety.

CARFAX recommends getting a pre-purchase inspection at a certified collision repair facility.

First Owner
When the first owner(s) obtains a title from a Department of Motor Vehicles as proof of ownership.

New Owner Reported
When a vehicle is sold to a new owner, the Title must be transferred to the new owner(s) at a Department of Motor Vehicles.

Ownership History
CARFAX defines an owner as an individual or business that possesses and uses a vehicle. Not all title transactions represent changes in ownership. To provide estimated number of owners, CARFAX proprietary technology analyzes all the events in a vehicle history. Estimated ownership is available for vehicles manufactured after 1991 and titled solely in the US including Puerto Rico. Dealers sometimes opt to take ownership of a vehicle and are required to in the following states: Maine, Massachusetts, New Jersey, Ohio, Oklahoma, Pennsylvania and South Dakota. Please consider this as you review a vehicle's estimated ownership history.

Rental
Vehicle was registered by a rental agency.

Title Issued
A state issues a title to provide a vehicle owner with proof of ownership. Each title has a unique number. Each title or registration record on a CARFAX report does not necessarily indicate a change in ownership. In Canada, a registration and bill of sale are used as proof of ownership.

Follow Us: **facebook.com/CARFAX** **@CARFAXinc** **About CARFAX**

CARFAX DEPENDS ON ITS SOURCES FOR THE ACCURACY AND RELIABILITY OF ITS INFORMATION. THEREFORE, NO RESPONSIBILITY IS ASSUMED BY CARFAX OR ITS AGENTS FOR ERRORS OR OMISSIONS IN THIS REPORT. CARFAX FURTHER EXPRESSLY DISCLAIMS ALL WARRANTIES, EXPRESS OR IMPLIED, INCLUDING ANY IMPLIED WARRANTIES OF MERCHANTABILITY OR FITNESS FOR A PARTICULAR PURPOSE.

© 2026 CARFAX, Inc., part of Mobility Global. All rights reserved.
11/17/26 8:49:39 AM (CST)

SHOW ME THE CARFAX

I have reviewed and received a copy of the CARFAX Vehicle History Report for this 2016 CHEVROLET EXPRESS vehicle (VIN: 1GAZGPFGXG1193965), which is based on information supplied to CARFAX and available as of 11/17/26 at 9:49 AM (EST).

Customer Signature	Date	Dealer Signature	Date